FULL SIZE FUSELAGE DRAWINGS

WARNING-DANGER!
DO NOT FLY MODEL AIRPLANES NEAR ELECTRIC POWER LINES. INSTANT DEATH CAN RESULT FROM CONTACT WITH, OR FLYING TOO CLOSE TO, ELECTRIC POWER LINES.

SIG CRAFTSMAN'S KIT

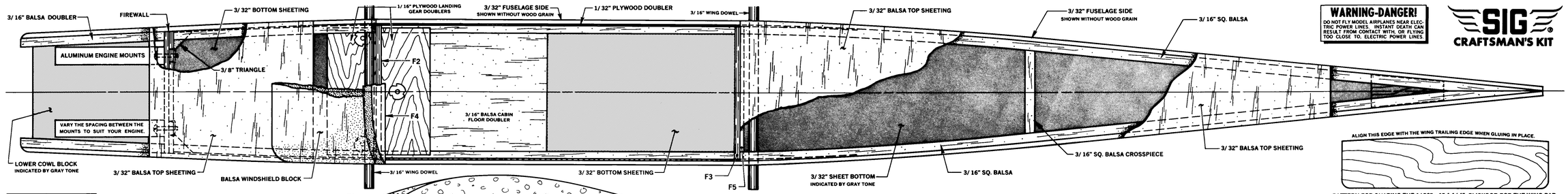

PATTERN FOR SHAPING THE 1/32" x 1" 4-1/4" PLYWOOD FOR THE WING PAD.

USE 7-4 PROP FOR .09 ENGINE.
USE 8-4 PROP FOR .15 ENGINE.
(NOT FURNISHED)
A 1-1/2" SPINNER WAS USED ON THE PROTOTYPE.

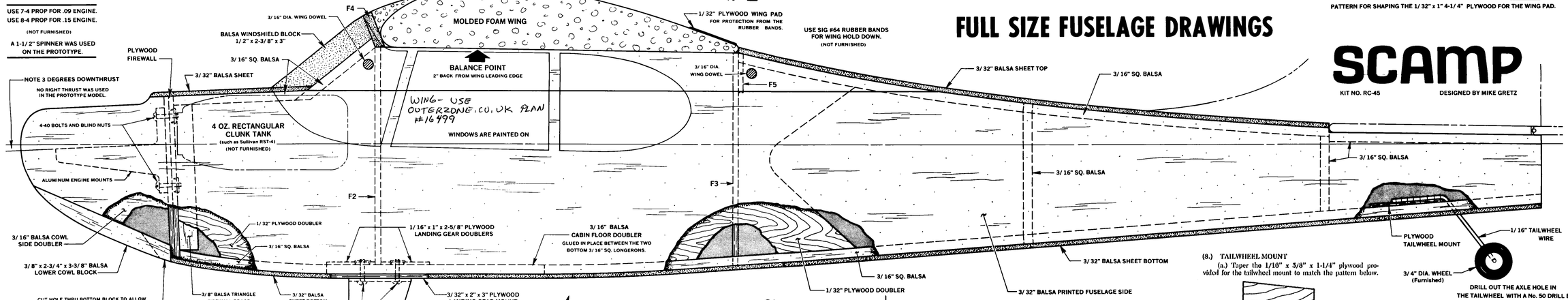

SCAMP

KIT NO. RC-45 DESIGNED BY MIKE GRETZ

(8.) TAILWHEEL MOUNT
(a.) Taper the 1/16" x 3/8" x 1-1/4" plywood provided for the tailwheel mount to match the pattern below.

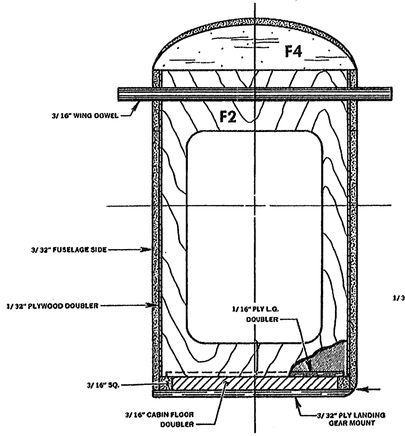

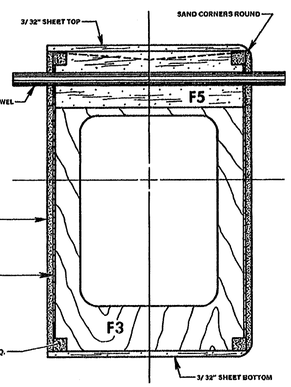

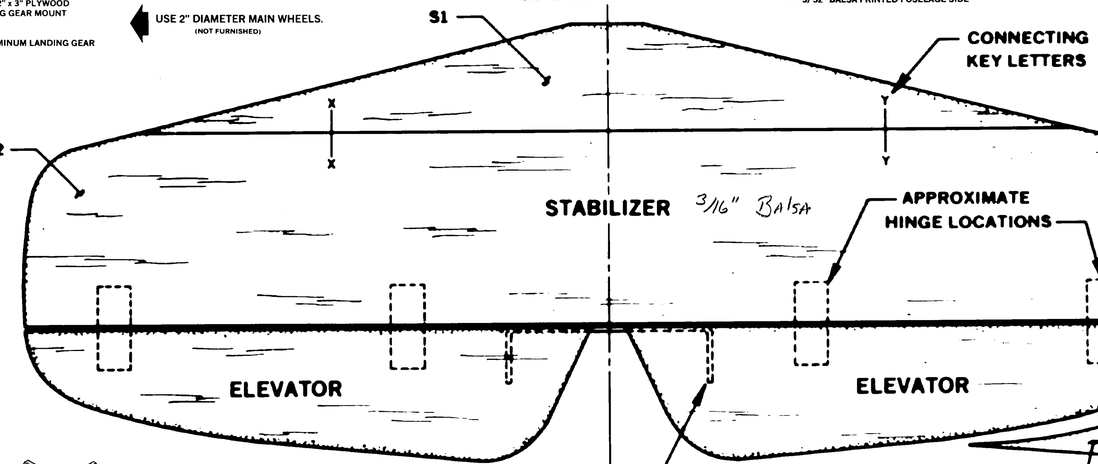

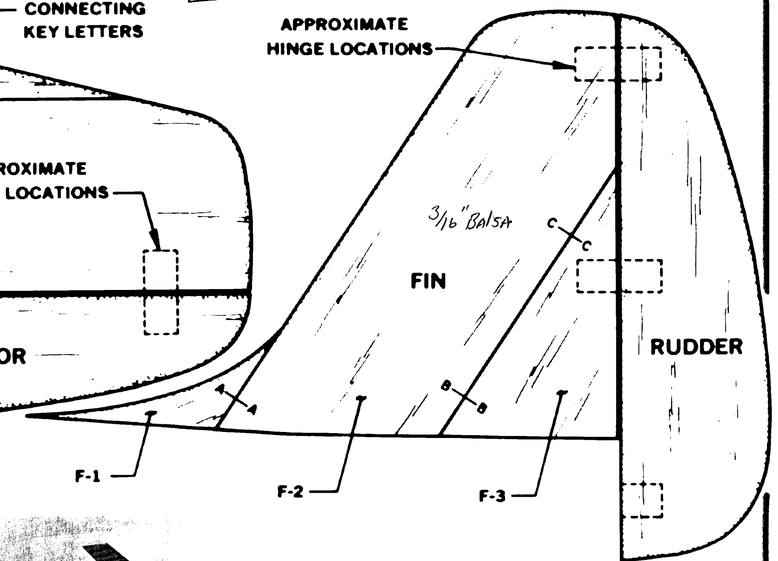

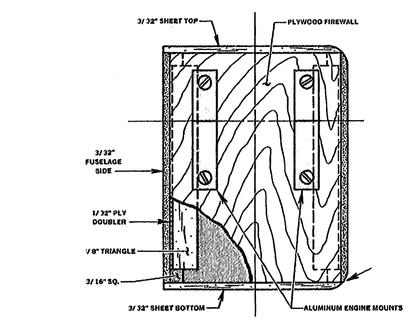

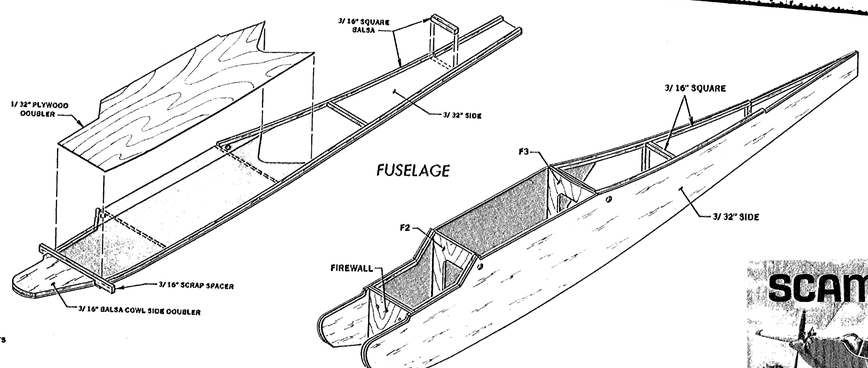

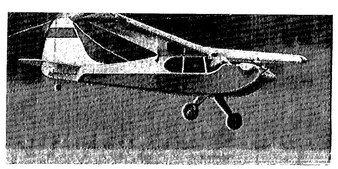

Prototype Scamp #1 on a landing approach. The wing on this model is painted with SIG PLASTIMAKE, and the fuselage and tail surfaces are painted with SIG SUPERCOAT DOPE. Power is an O.S. Max .15.

Fuji .099

OS MAX .15 RK (Steel Fin)

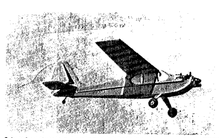

Prototype Scamp #2 on a flyby. The entire model, including the linen wing, is covered with orange ECONOKOTE, made by Fox Flite. A FOX 19 engine provides the power.

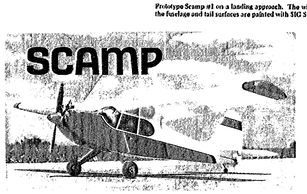

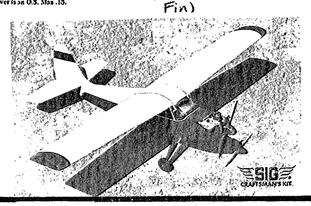

45" Span/290 in²
3 channel
.09-.15 or 300 w Power
1979
Designed by: Mike Gretz

SIG CRAFTSMAN'S KIT

SCAMP

KIT NO. RC-45 DESIGNED BY MIKE GRETZ

23x36 DAF 2026